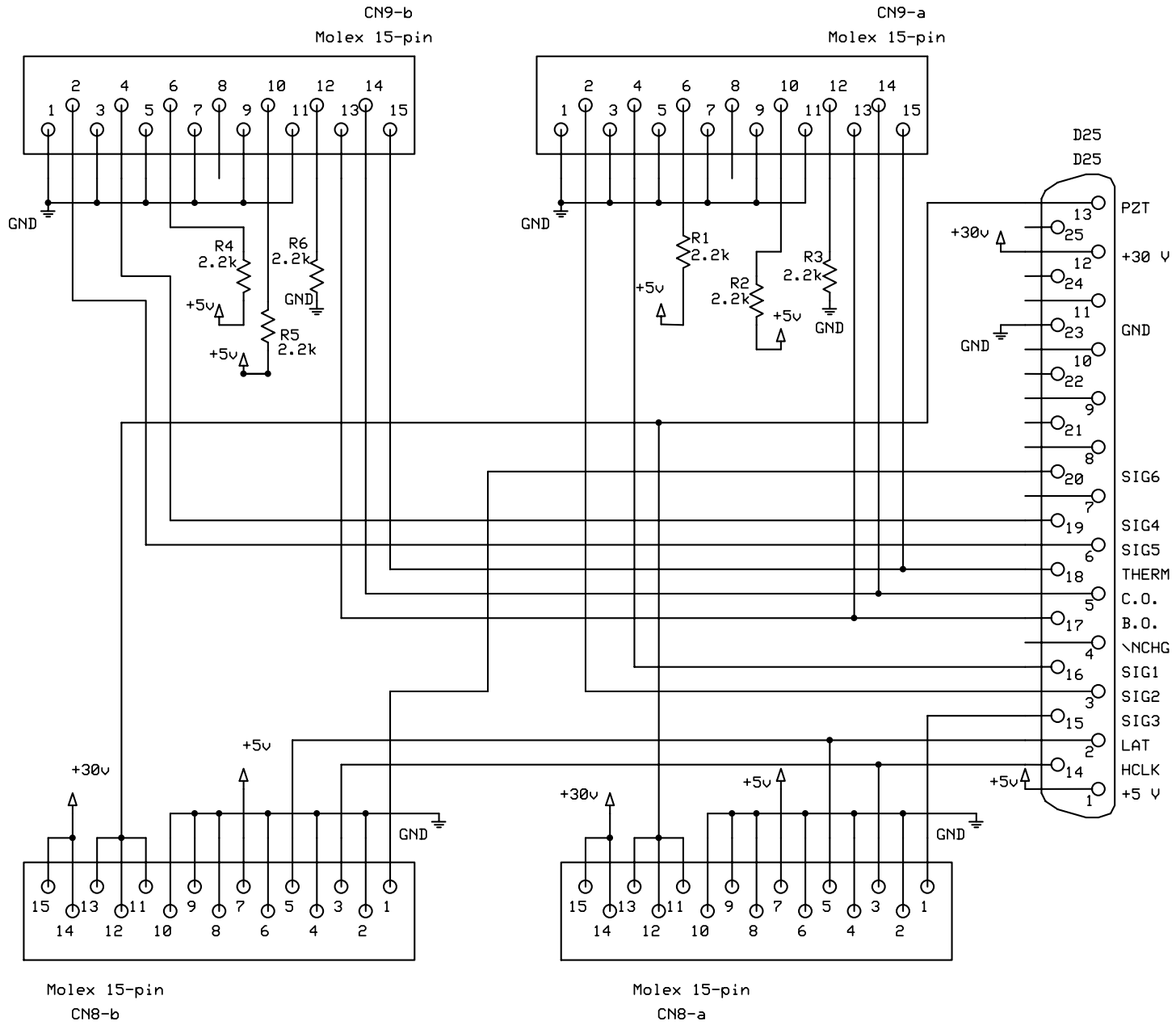

Institute for Systems Biology		
Board 1503		
Chris Lausted	Rev 2 3/20/2005	Page # 1